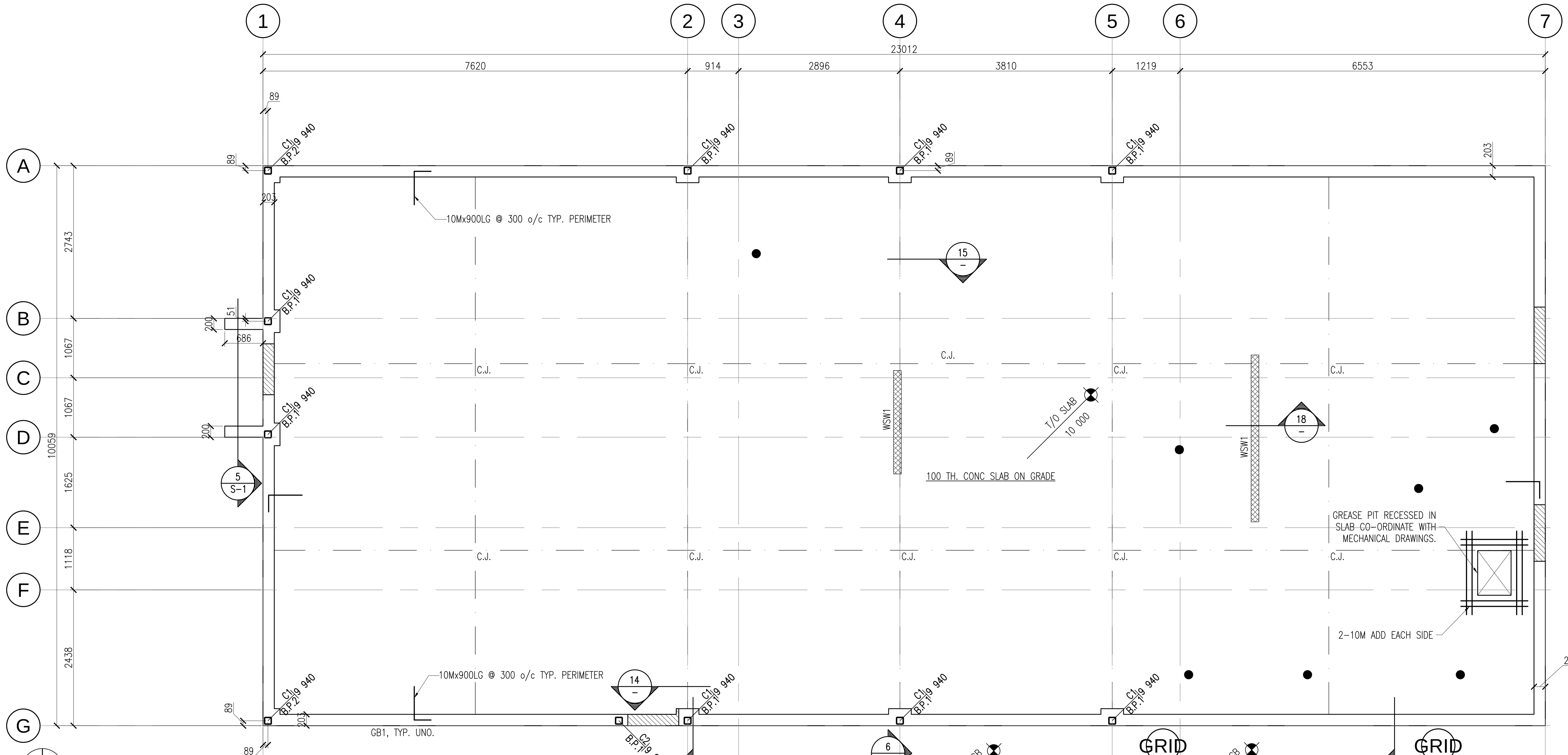

1 FOUNDATION PLAN
1:50

NOTES:

1. REFER TO ARCHITECTURAL DRAWINGS FOR SLOPES TO SLAB ON GRADE & FLOOR DRAINS.
2. PROVIDE 10M DOWELS @ 400 o/c FROM GRADE BEAM TO ALL EXTERIOR CONCRETE SLABS, SIDEWALKS AND PADS.
3. VERIFY ALL DIMENSIONS WITH ARCH. DWGS. PRIOR TO LAYOUT OF PILES/GRADE BEAM.
4. REFER TO GEOTECHNICAL REPORT FILE NO: PREPARED BY PMEL 11392 FOR ADDITIONAL INFORMATION.

   100 SLAB ON GRADE (T/O SLAB ELEV = 10 000)
   - 10M @ 300 o/c E/W MIDDEPTH
   - 0.15mm POLY
   - 200mm GRANULAR BASE COURSE (TYPE 33) COMPACTED TO 100 % S.P.D.
   - 400mm GRANULAR FILL (TYPE 8) COMPACTED TO 97% S.P.D.
   - NON WOVEN GEOTEXTILE
   - REFER TO GEOTECHNICAL REPORT FOR ADDITIONAL REQUIREMENTS.

   150 SLAB ON GRADE (DRIVE THRU SLAB)
   - 15M @ 300 o/c E/W MIDDEPTH
   - 0.15mm POLY
   - 200mm GRANULAR BASE COURSE (TYPE 33) COMPACTED TO 100% S.P.D.
   - 400mm GRANULAR FILL (TYPE 8) COMPACTED TO 97% S.P.D.
   - REFER TO GEOTECHNICAL REPORT

   200 SLAB ON GRADE (GARBAGE ENCLOSURE)
   - 15M @ 300 o/c T&B E/W (50 c.c. TOP, 38 c.c. BOT)
   - 0.15mm POLY
   - 200mm GRANULAR BASE (TYPE 33) COMPACTED TO 100% S.P.D.
   - 400mm GRANULAR FILL (TYPE 8) COMPACTED TO 97% S.P.D.
   - REFER TO GEOTECHNICAL REPORT

5. SMOOTH FINISH ON ALL EXPOSED CONCRETE ABOVE GRADE.

LEGEND:

- INDICATES SHEAR WALLS
- RECESS GRADE BEAM AT DOORWAYS & PILASTERS, CAST SLAB OVER. REFER TO ARCHITECTURAL DRAWINGS FOR LOCATION AND DIMENSIONS
- INDICATES MECHANICAL OPENINGS VERIFY SIZE AND LOCATION w/ MECH. DWGS. PROVIDE ADDITIONAL REINF. AS SHOWN
- INDICATES DRAIN LOCATIONS; VERIFY w/ MECH. DWGS.
- C.J. INDICATES CONTROL JOINTS, SEE 15/–
- INDICATES THICKENED EDGE BELOW

COLUMN LEGEND

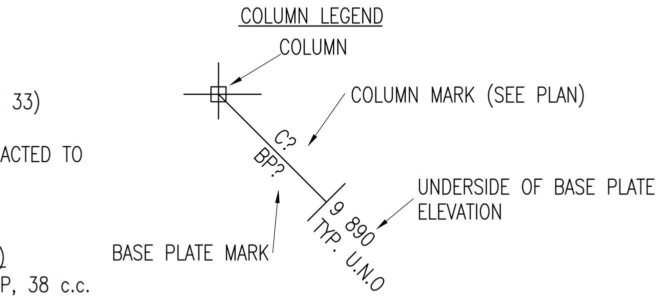

COLUMN SCHEDULE	
MARK	COLUMN SIZE
C1	HSS 127x127x8.0
C2	HSS 102x102x6.4
C3	HSS 152x152x6.4

GRADE BEAM SCHEDULE					
MARK	SIZE	REINFORCMENT		VERTICALS/TIES	REMARKS
		TOP	BOTTOM		
GB1	203 X 710	2-15M	2-15M	10M @ 350 o/c	SEE DETAIL 17/-

WALL SCHEDULE					
MARK	STUD	SIZE	SPACING	SHEATHING	FASTENERS
WSW1	SPF No 1/2	38x140	406 o/c	12.7mm OSB	150 o/c EDGE 300 o/c FIELD

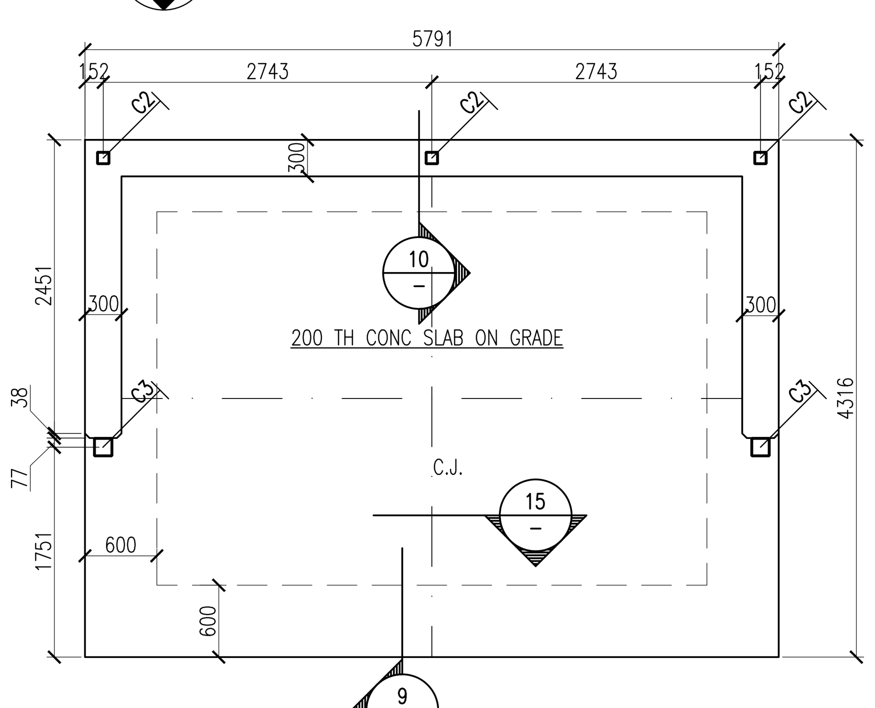

2 GARBAGE ENCLOSURE
1:50 REFER TO SITE PLAN FOR LOCATION

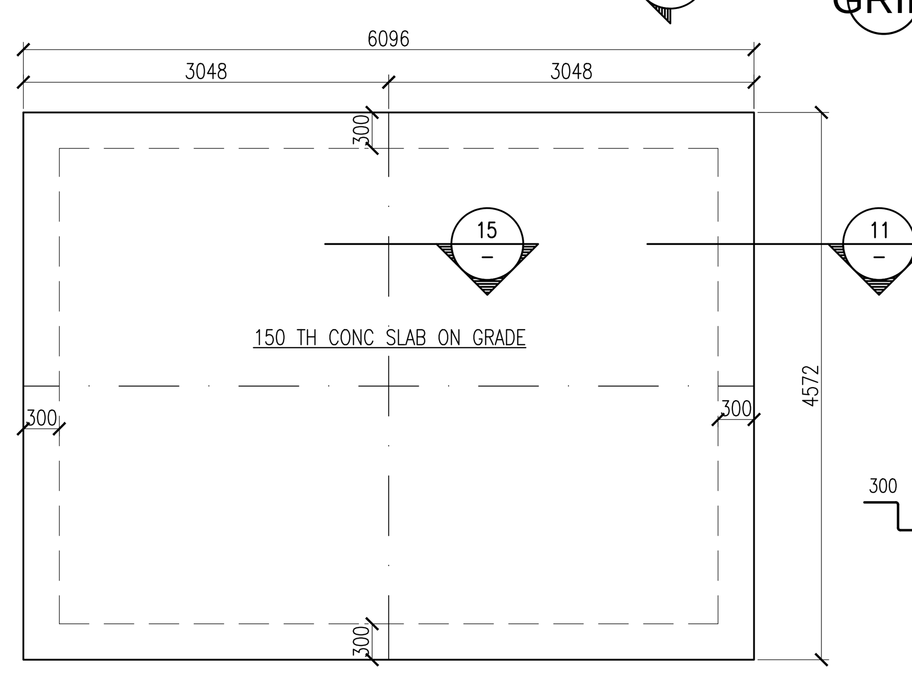

3 VEHICLE DETECTOR LOOP
1:50 REFER TO SITE PLAN FOR LOCATION

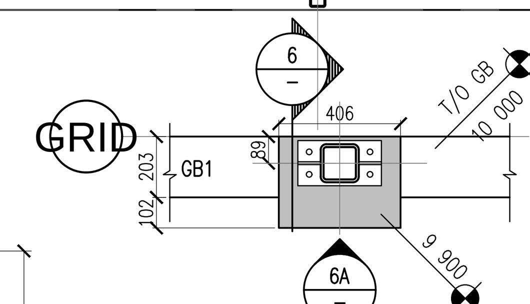

4 PILASTER DETAIL
1:20

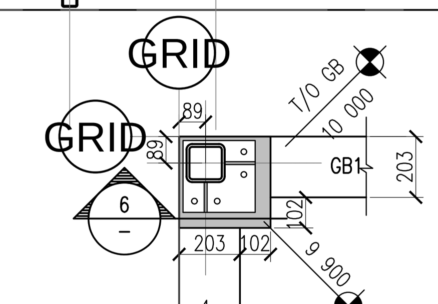

5 PILASTER DETAIL
1:20

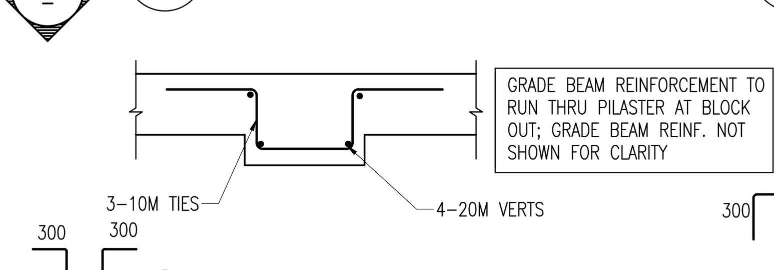

4A PILASTER REINF.
1:20

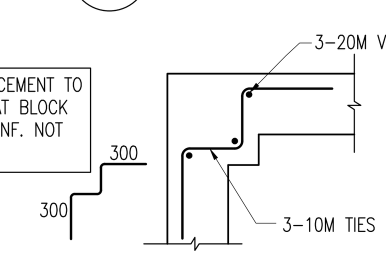

5A PILASTER REINF.
1:20

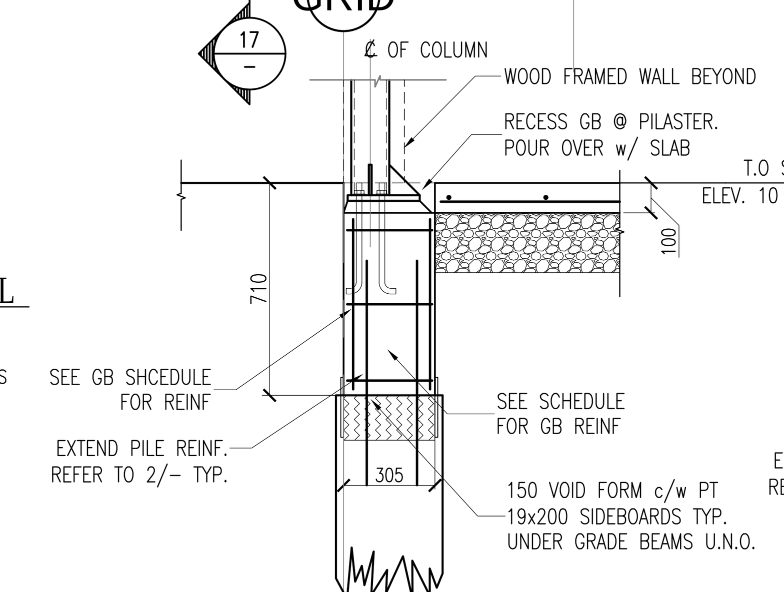

6 PILASTER SECTION
1:20

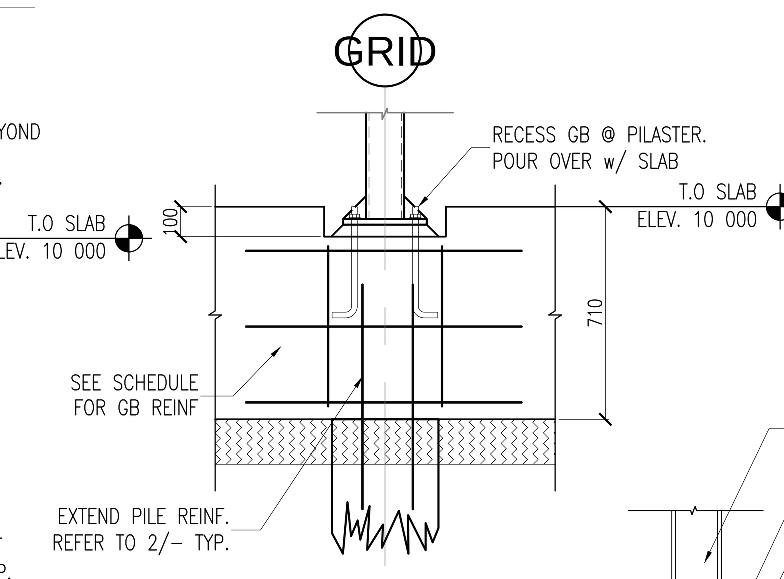

6A PILASTER ELEVATION
1:20

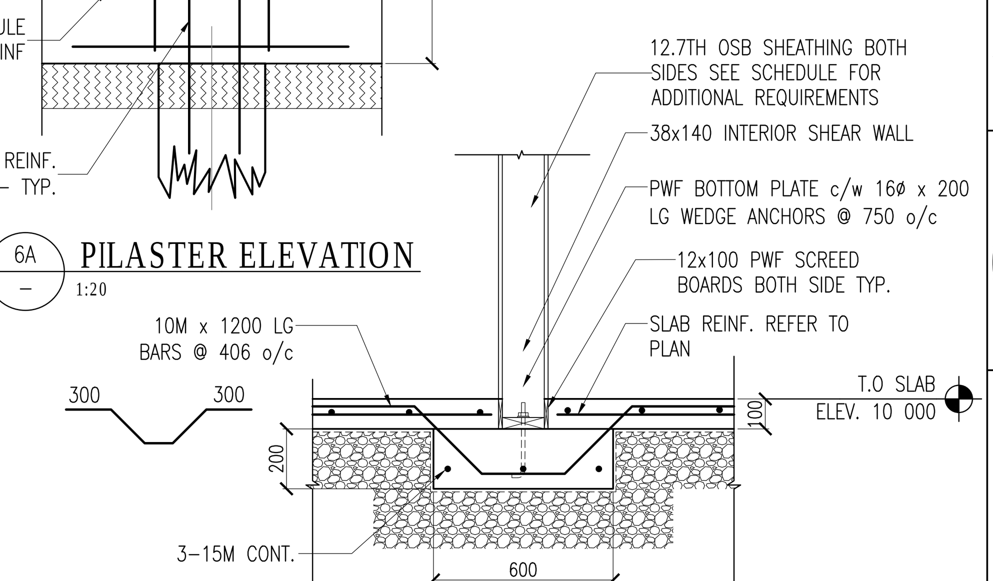

18 DETAIL
1:20

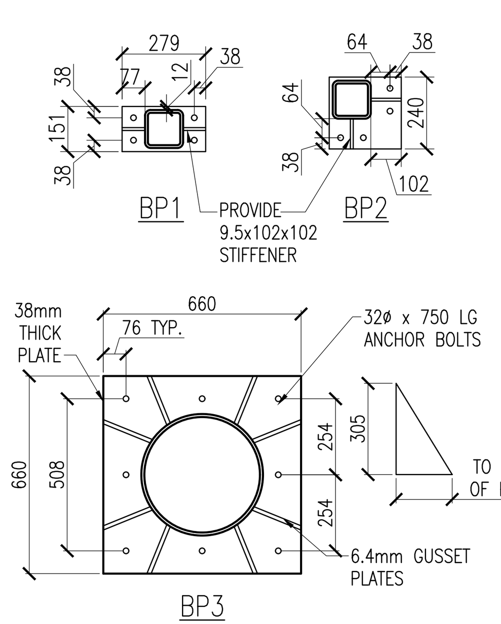

7 BASE PLATE DETAILS

- ALL A-BOLTS 19mmø x 400mm
- 100mm PROJECTION
- 40mm SHIM AND GROUT
- ALL BASE PLATES 19mm THICK

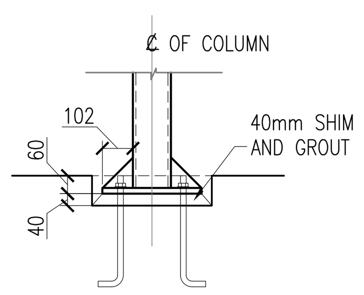

TYP. COLUMN SECTION

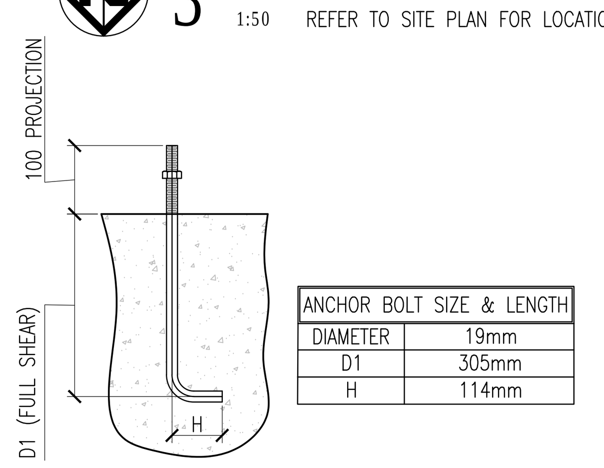

ANCHOR BOLT SIZE & LENGTH	
DIAMETER	19mm
D1	305mm
H	114mm

8 ANCHOR BOLT DETAIL

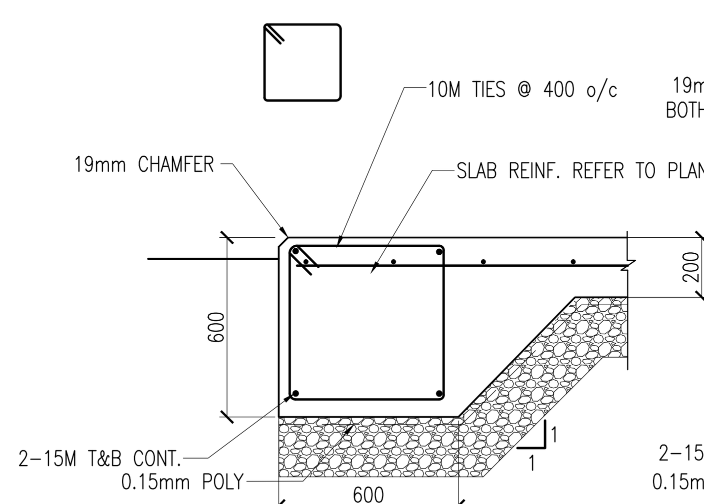

9 DETAIL
1:20

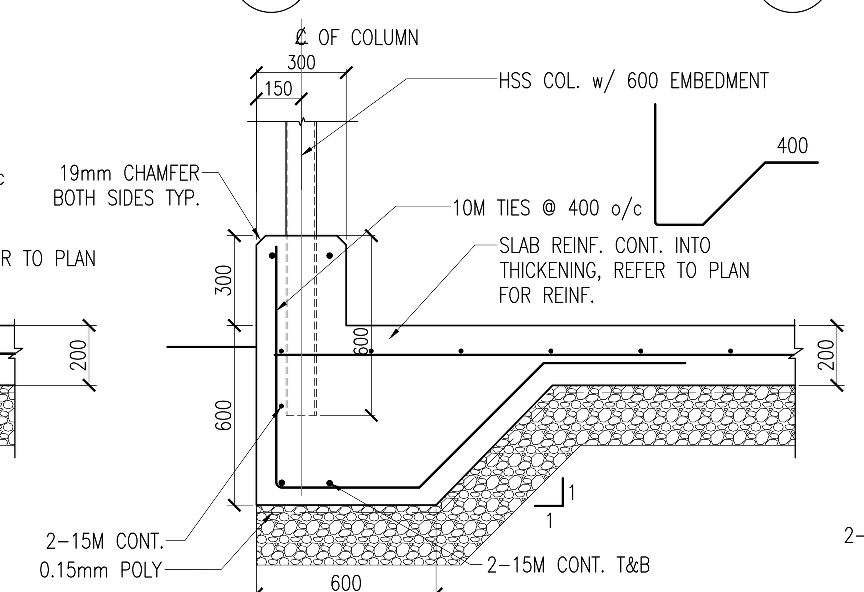

10 GARBAGE ENCLOSURE WALL SECTION
1:20

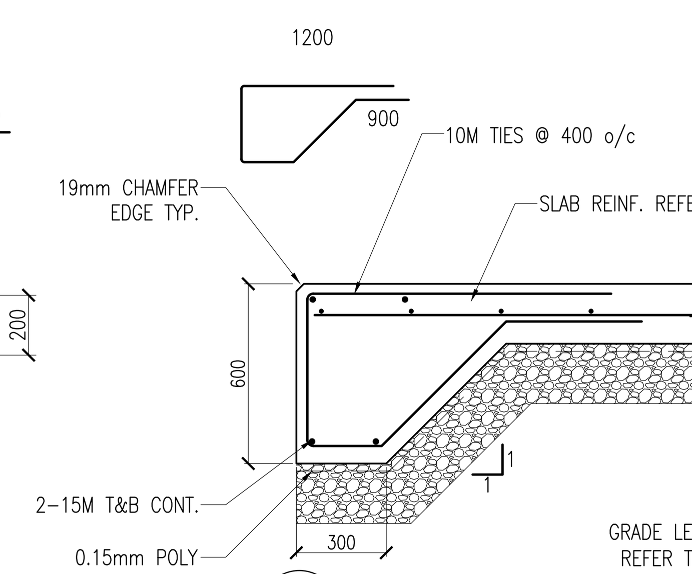

11 DETAIL
1:20

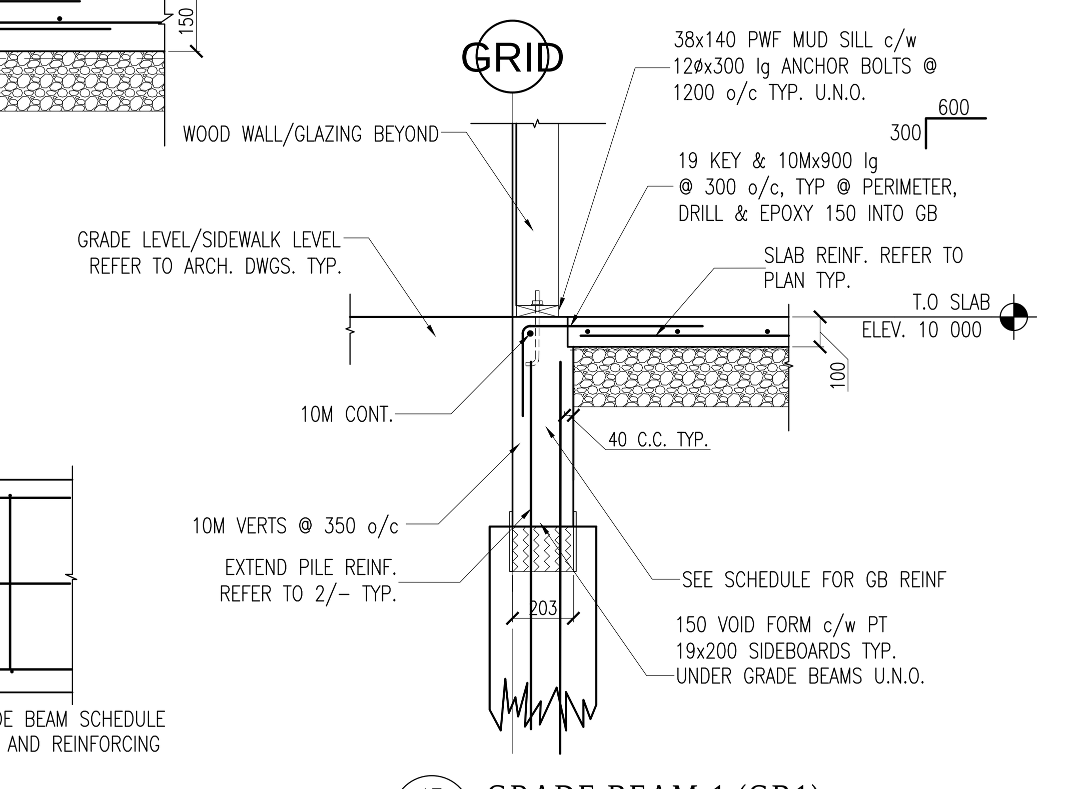

17 GRADE BEAM 1 (GB1)
1:20

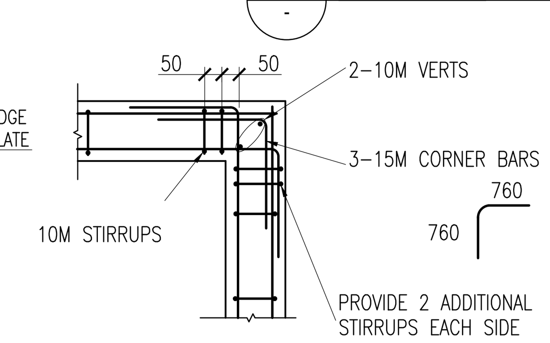

12 'L' G.B INTERSECTION
1:20

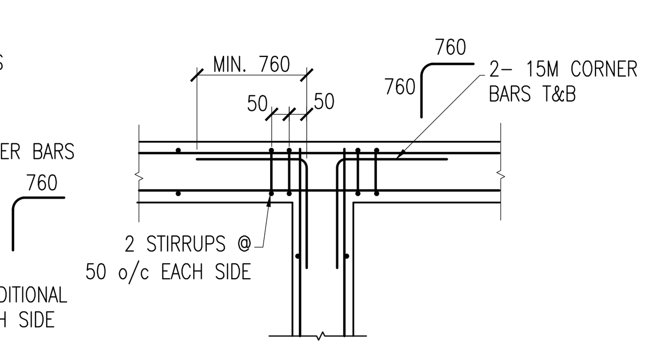

13 `T` G.B. INTERSECTION
1:20

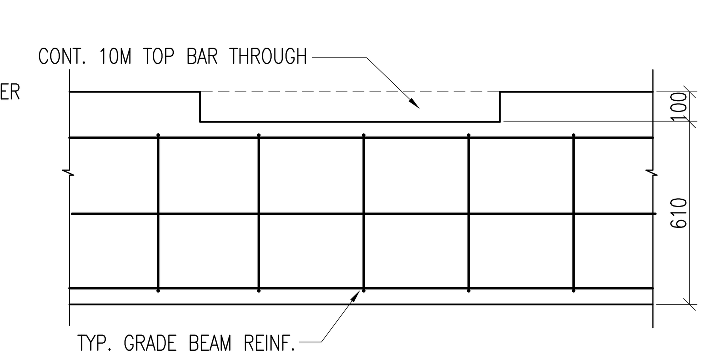

RECESS GRADE BEAM @ ALL DOORS, SEE ARCH FOR LOCATIONS.

14 TYP. @ DOORWAYS
NTS

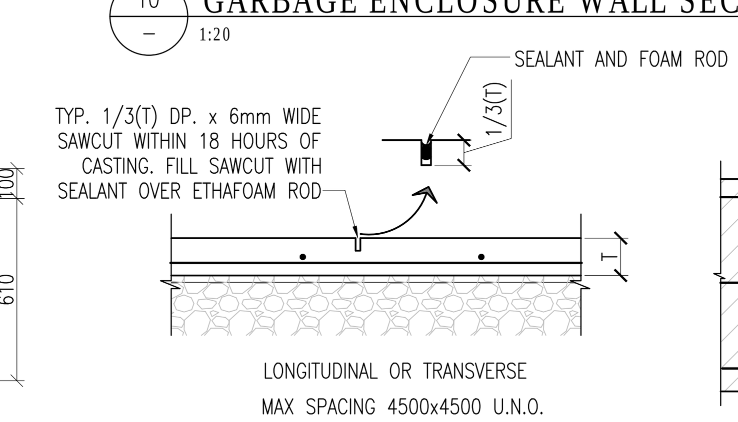

15 CRACK CONTROL JOINT
1:20

NOTE:
POUR BREAKS TO BE LOCATED AT L/2; WHERE L IS THE DISTANCE BETWEEN PILES

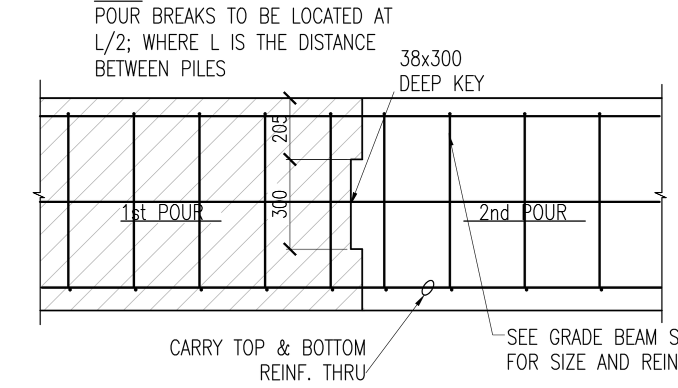

16 TYP. POUR BREAK IN GRADE BEAM

No.	Description	Date

REVISIONS

1. THIS DRAWING IS THE PROPERTY OF A&W FOOD SERVICES OF CANADA INC., & MAY NOT BE USED IN WHOLE OR IN PART FOR ANY PROJECT OTHER THAN THAT DESIGNATED HEREON
2. DO NOT SCALE DRAWINGS - WRITTEN DIMENSIONS TAKE PRECEDENCE
3. CONTRACTOR TO VERIFY JOB SITE DIMENSIONS & CONDITIONS, REPORT ANY & ALL DISCREPANCIES TO THE OWNER & A&W IMMEDIATELY BEFORE PROCEEDING WITH WORK
4. ALL WORK TO CONFORM TO THE LATEST LOCAL BUILDING CODES, BY-LAWS, & NFPA REQUIREMENTS, IN ADDITION TO OTHER REGULATIONS HAVING JURISDICTION

Consultant

PROFESSIONAL ENGINEER M.A. KIFFIAK MEMBER 11861 2016 04 06 YR. MN. DAY SASKATCHEWAN

ASSOCIATION OF PROFESSIONAL ENGINEERS & GEOSCIENTISTS OF SASKATCHEWAN CERTIFICATE OF AUTHORIZATION PRAKASH CONSULTING LTD. NUMBER C1366 PERMISSION TO CONSULT HELD BY: DISCIPLINE CIVIL SASK. REG. No. 11861 SIGNATURE

PRAKASH
PRAKASH CONSULTING LTD
STRUCTURAL ENGINEERS
#4-210 15TH STREET EAST
PRINCE ALBERT, SK S6V 1G2
T 306 922 2101 F 306 763 0212

RNF VENTURES LTD.
811 CENTRAL AVENUE
PRINCE ALBERT, SK
S6V 4V2
PH: (306) 763-3700
FX: (306) 763-4700

A&W FOOD SERVICES OF CANADA INC.
DESIGN & CONSTRUCTION

Project
A&W RESTAURANT
2015 GFMGF CONCEPT DESIGN
11401 RAILWAY AVE,
NORTH BATTLEFORD, SK

Title
FOUNDATION PLAN

File Name

Date Created	Prototype Version
JAN 28, 2016	2178L (2015 V1.1)
Project Number A&W 14064, Consultant 2016-01	Page Number S-2
Drawn By GG, Scale AS NOTED	